Maximus' Tow Brake and On-board Air Systems

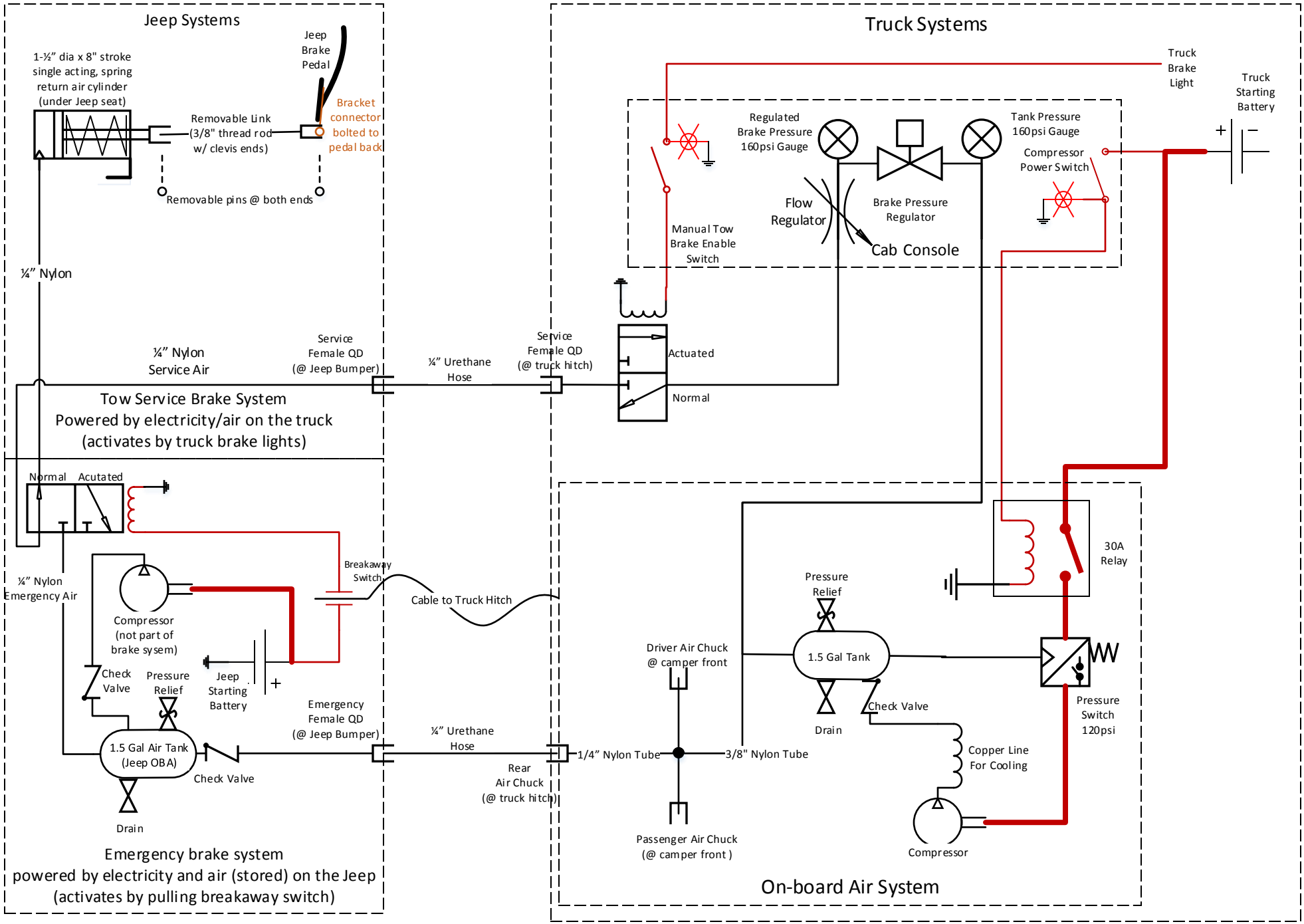

Rev. 1.1 23FEB23